RBC PROPRIETARY AND CONFIDENTIAL INFORMATION
This document is the property of REGAL BELOIT CORPORATION ("RBC") including its subsidiaries and divisions and contains proprietary information of RBC. This document is loaned on the express condition that neither it nor the information contained therein shall be disclosed to others without the express written consent of RBC, and that the information shall be used by the recipient only as approved expressly by RBC. This document shall be returned to RBC upon its request. This document may be subject to certain restrictions under U.S. export control laws and regulations.

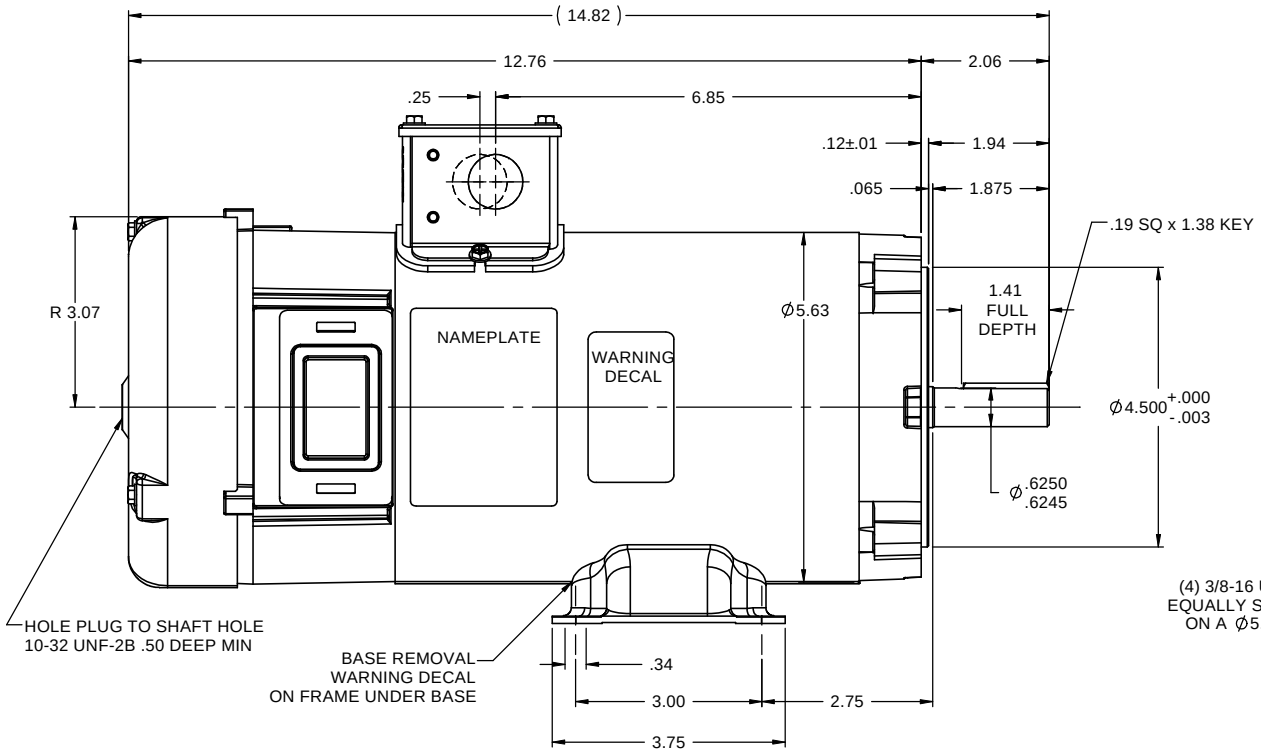

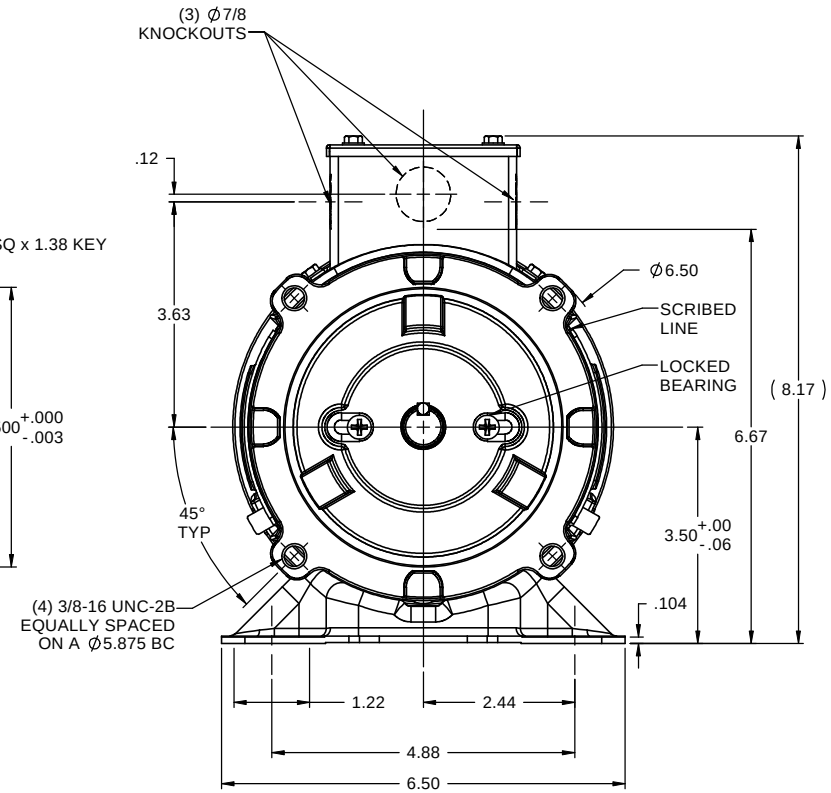

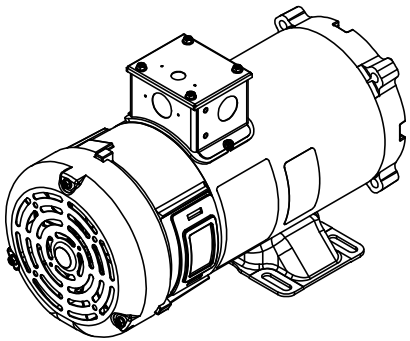

NOTES:
1) MAXIMUM FACE RUNOUT .004 T.I.R.
2) MAXIMUM PILOT ECCENTRICITY .004 T.I.R.
3) PERMISSIBLE SHAFT RUNOUT .002 T.I.R.
4) GASKETS THROUGHOUT

PREASSIGNED PRODUCTION # 109192.00

				TOLERANCES UNLESS SPECIFIED	LEESON ELECTRIC MOTORS GEARMOTORS AND DRIVES	DRAWN	SAD 10/6/09
				DEC INCHES		CHK	
				.X ±.1		APPR	
				.XX ±.03	TITLE OUTLINE	SCALE	1:2
				.XXX ±.005	48 FRAME DC - S56C MOUNT	REF	OLPR090276
				.XXXX ±.0005	MAT'L	FMF	
NO	REVISION	BY & DATE	CHK	ANG ±1/2°	FINISH	PAGE	OF
THIRD ANGLE PROJECTION			RFP		PREV	SIZE B	DRAWING NO 133OUTLINE-09	REV
			NETWORK FILE NAME				