1270UTLINE–09

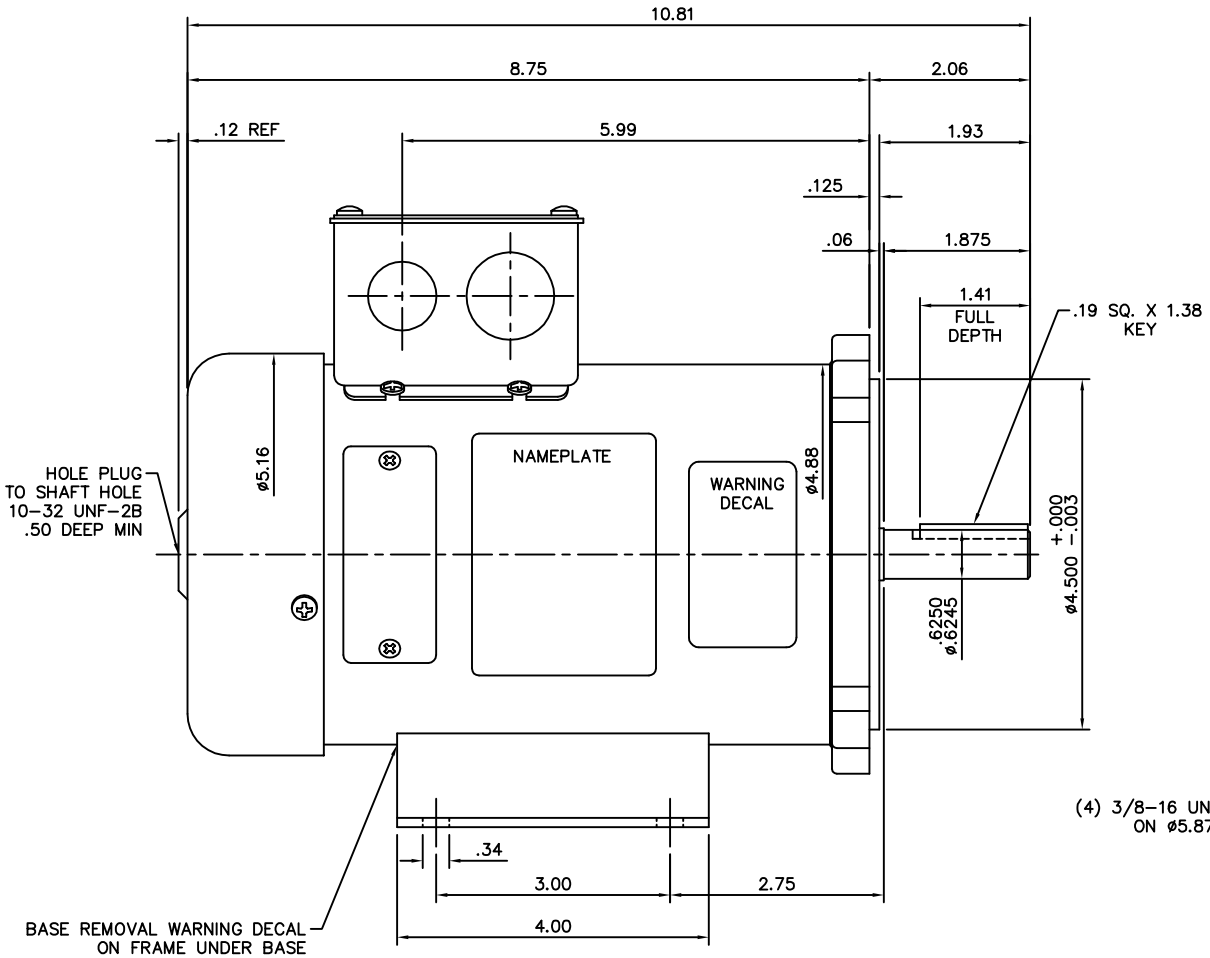

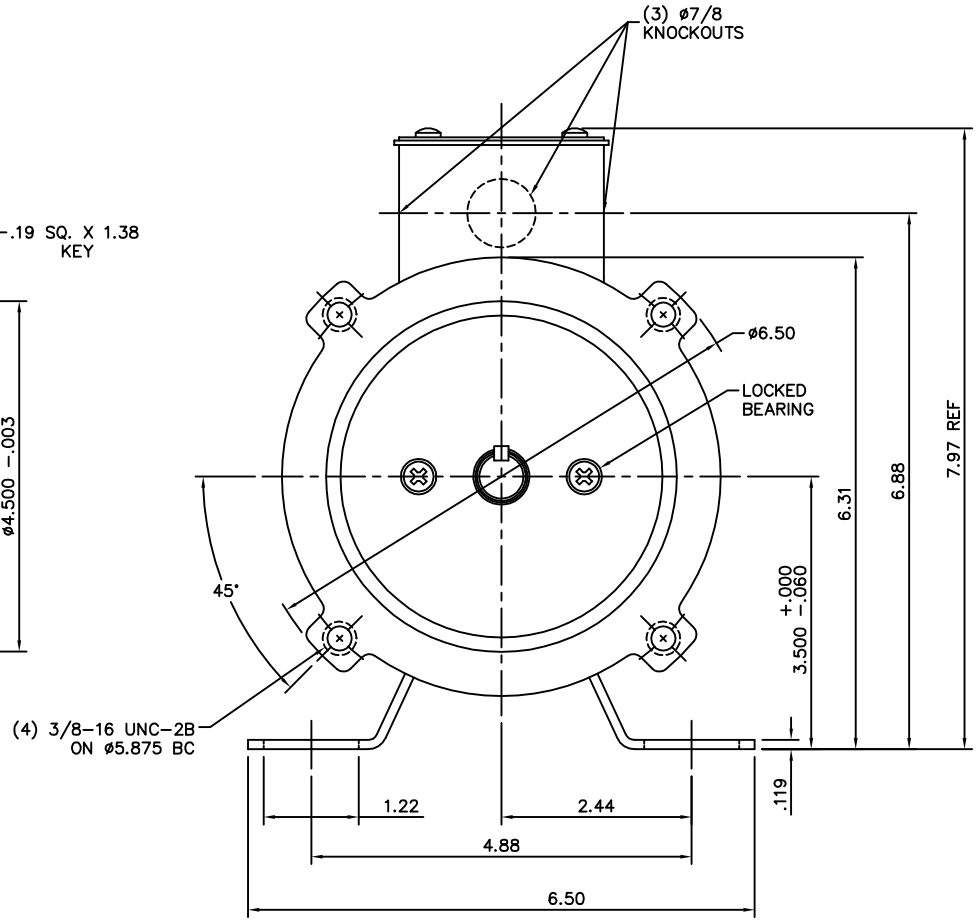

PREASSIGNED PRODUCTION # 098442.00

NOTES:

1. MAXIMUM FACE RUNOUT TO BE .004 T.I.R.
2. MAXIMUM PILOT ECCENTRICITY .004 T.I.R
3. PERMISSIBLE SHAFT RUNOUT .002 T.I.R.
4. GASKETS THROUGHOUT.

NO.	REVISION	BY & DATE

TOLERANCES UNLESS SPECIFIED	
DEC.	INCHES
.X	±.1
.XX	±.03
.XXX	±.005
.XXXX	±.0005
CHK ANG	±1/2°

LEESON ELECTRIC MOTORS GEARMOTORS AND DRIVES

TITLE: OUTLINE 42 FRAME DC

MAT'L.

FINISH

CAD FILE: 1270UTLINE–09

RFP

DIST

DRAWN SAD 10/6/09

CHK

APPD

SCALE 5=8

REF OLPR090272

FMF

PREV

SIZE B

DRAWING NO. 1270UTLINE–09

REV.

THIS DRAWING IN DESIGN AND DETAIL IS OUR PROPERTY AND MUST NOT BE USED EXCEPT IN CONNECTION WITH OUR WORK ALL RIGHTS OF DESIGN AND INVENTION ARE RESERVED
THIS IS AN ELECTRONICALLY GENERATED DOCUMENT – DO NOT SCALE THIS PRINT